IWATA HIGH PERFORMANCE SERIES - A, B, SB, C, BC, BC2

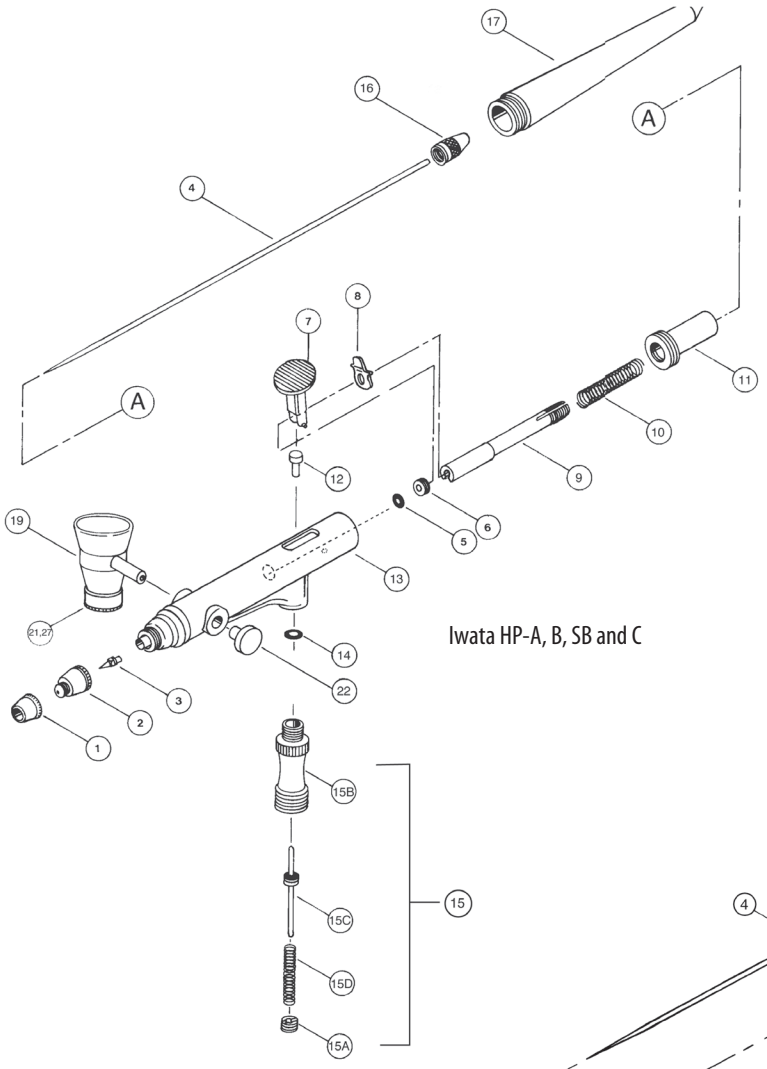

Iwata HP-A, B, SB and C

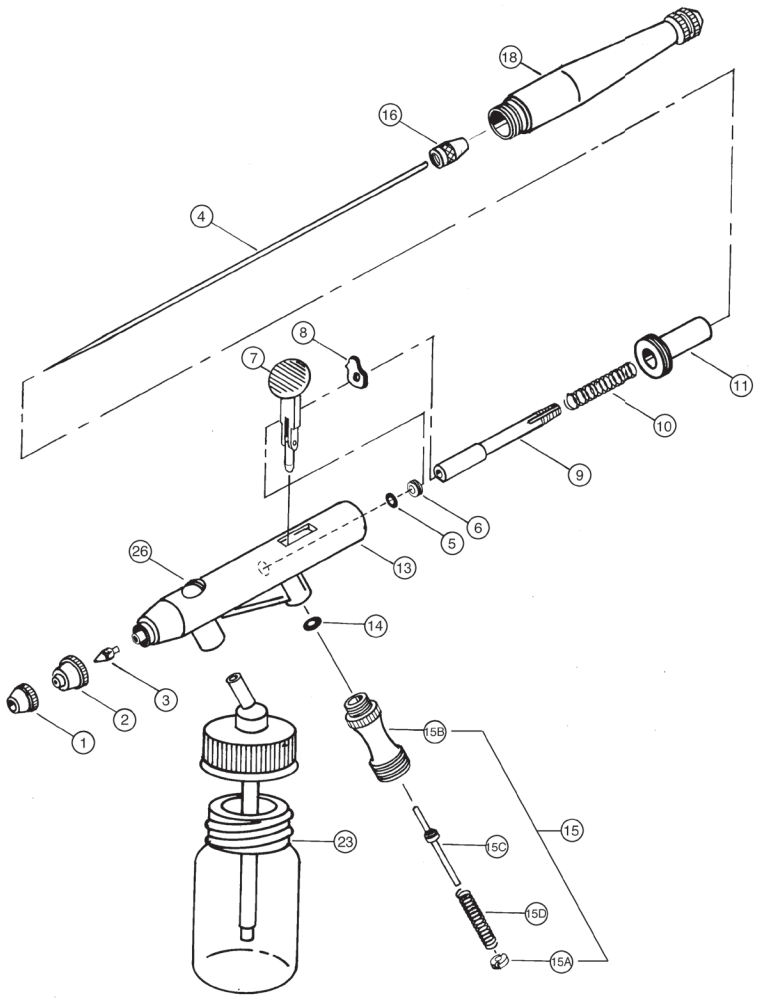

IWATA HIGH PERFORMANCE SERIES - A, B, SB, C, BC, BC2

#	ITEM DESCRIPTION		PRICE CODE	ITEM #	HP A	HP B	HP SB	HP C	HP BC	HP BC2
1	Needle Cap		B	I 110 1	■	■	■	x	x	x
			B	I 110 2	x	x	x	■	■	■
2	Nozzle Cap	0.2 mm	D	I 140 1	■	x	x	x	x	x
		0.2 mm	D	I 140 2	x	■	■	x	x	x
		0.3 mm	D	I 140 3	x	x	x	■	■	opt
		0.4 mm	D	I 140 4	x	x	x	opt	opt	■
3	Fluid Nozzle	0.2 mm	G	I 080 1	■	x	x	x	x	x
		0.2 mm	G	I 080 2	x	■	■	x	x	x
		0.3 mm	G	I 080 3	x	x	x	■	■	opt
		0.4 mm	G	I 080 4	x	x	x	opt	opt	■
		0.2 mm	G	I 085 2	x	x	x	opt	opt	opt
		0.3 mm	G	I 085 3	opt	opt	opt	x	x	x
4	Fluid Needle	0.2 mm	C	I 075 1	■	x	x	x	x	x
		0.2 mm	C	I 075 2	x	■	■	x	x	x
		0.3 mm	C	I 075 3	x	x	x	■	■	opt
		0.4 mm	C	I 075 4	x	x	x	opt	opt	■
5	Packing Fluid Needle (O-Ring)		A	I 150 1	■	■	■	x	x	x
			A	I 150 2	x	x	x	■	■	■
6	Needle Packing Screw		A	I 125 1	■	■	■	■	■	■
7	Main Lever		D	I 100 1	■	■	■	x	x	x
			D	I 100 2	x	x	x	■	x	x
	Main Lever/Piston		G	I 100 3	x	x	x	x	■	■
8	Auxiliary Lever		A	I 040 1	■	■	■	x	x	x
			A	I 040 4	x	x	x	■	x	x
			A	I 040 5	x	x	x	x	■	■
9	Needle Chucking Guide		C	I 115 1	■	■	■	x	x	x
			C	I 115 2	x	x	x	■	■	■
10	Needle Spring		A	I 135 2	■	■	■	x	x	x
			A	I 135 3	x	x	x	■	■	■
11	Spring Guide		C	I 170 1	■	■	■	x	x	x
			C	I 170 2	x	x	x	■	■	■
12	Valve Piston (CA PROP 65)		A	I 175 1	■	■	■	■	x	x
13	Body*			N/A	■	x	x	x	x	x
				N/A	x	■	x	x	x	x
				N/A	x	x	■	x	x	x
				N/A	x	x	x	■	x	x
				N/A	x	x	x	x	■	■
14	Packing Air Piston (O-Ring)		A	I 145 1	■	■	■	■	■	■

#	ITEM DESCRIPTION		PRICE CODE	ITEM #	HP A	HP B	HP SB	HP C	HP BC	HP BC2
15	Air Valve Set (CA PROP 65)		G	I 030 1	■	■	■	x	x	x
			G	I 030 4	x	x	x	■	■	■
15A	Air Valve Guide (CA PROP 65)		A	I 025 1	■	■	■	■	■	■
15B	Air Valve Body		D	I 020 1	■	■	■	■	■	■
15C	Air Valve (CA PROP 65)		B	I 015 1	■	■	■	x	x	x
			B	I 015 4	x	x	x	■	■	■
15D	Air Valve Spring		A	I 035 1	■	■	■	■	■	■
16	Needle Chucking Nut		A	I 120 1	■	■	■	x	x	x
			A	I 120 2	x	x	x	■	■	■
17	Handle		E	I 090 1	■	■	■	x	x	x
			E	I 090 2	x	x	x	■	x	x
18	Pre-Set Handle		G	I 155 1	opt	opt	opt	x	x	x
			G	I 155 2	x	x	x	opt	■	■
26	Blanking Screw		B	I 045 1	x	x	x	x	■	■
22	Blanking Cover		A	I 045 2	x	x	■	x	x	x
23	Glass Bottles	3/4 oz	G	I 405 2	x	x	x	x	■	■
		1/2 oz	G	I 420 2	x	x	x	x	opt	opt
	Spanner		A	I 165 1	■	■	■	■	■	■
	Conversion Kit (Converts 0.3 mm HP- C and HP- BC to 0.4 mm Size Nozzle - 4 Piece Conversion)		I	I 195 1	x	x	x	■	■	x
	Crown Cap		D	I 105 0	opt	opt	opt	opt	opt	opt
	Quick Fit Set (QD Screws Onto Airhose and Adaptor Screws Onto Airbrush)			I 160 3	opt	opt	opt	opt	opt	opt
	Quick Fit Adaptor (Adaptor Screws Onto Airbrush)			I 160 4	opt	opt	opt	opt	opt	opt
	Adaptor (Iwata Airbrushes to Paasche Air Hose)			J 001	opt	opt	opt	opt	opt	opt
	Adaptor (Iwata Airbrushes to T & C/Badger Air Hoses)			J 002	opt	opt	opt	opt	opt	opt
	Fluid Cup									
	Side Cup	1/8 oz	G	I 070 3	x	x	■	x	x	x
	Side Cup w/Lid	1/4 oz	G	I 070 4	x	x	opt	x	x	x
	Gravity Cup w/Lid	1/2 oz		I 070 6	x	x	opt	x	x	x
25	Lid		C	I 095 4	x	x	x	■	x	x
			C	I 095 7	x	x	■	x	x	x
21	Lid Cover 1/8, 1/4 oz		B	I 095 6	x	x	■	x	x	x
27	Packing Lower Lid (Gasket)		A	I 150 5	x	x	■	x	x	x

CA PROP 65 ***CALIFORNIA PROP 65 WARNING:*** *Certain products identified with this symbol and offered for sale in this catalog contain lead, a chemical known to the State of California to cause cancer, birth defects and other reproductive harm.*

■ = yes x = no opt = optional

**Replacement parts not available.*